MITCHELL HISTORIC PRESERVATION COMMISSION AGENDA
MITCHELL PUBLIC LIBRARY, COMMUNITY ROOM
231 N DUFF, MITCHELL, SD
4:00 PM, WEDNESDAY, JANUARY 18, 2017

1. **CALL TO ORDER**

2. **ROLL CALL**

3. **Approval Of Agenda**

4. **APPROVAL OF MINUTES OF FEBRUARY 9, 2016**

   Documents:

   HPC MINUTES FEB 9 2016 REVISED.DOCX.PDF

5. **DISCUSSION OF FUTURE MEETING DATES AND TIMES**

6. **Other Business**

7. **APPROVAL OF PLAN**
   APPROVAL OF PLAN FOR HARD DRIVE CENTRAL, 318 N MAIN STREET, REVOLVING LOAN FUND REQUEST

   Documents:

   2016_1121 SUBMISSION PACKET.PDF

8. **11-1 REVIEW: DEMOLITION OF 512 N MAIN ST**
   THE CITY IS REQUESTING A DEMOLITION PERMIT OF THE BUILDING AT 512 N MAIN ST, MITCHELL, SD & TOUR OF BUILDING

   Documents:

   512NMAIN.PDF

9. **ADJOURNMENT AT 512 N MAIN ST**

CITY OF MITCHELL

HISTORIC PRESERVATION COMMISSION

February 9, 2016

Not Approved

Chairman Logan called the February 9, 2016 meeting of the Mitchell Historic Preservation Commission to order at 12:00 pm, Council Chambers, City Hall, Mitchell, South Dakota.

Members Present: Logan, Swenson, Buechler, Clark, Hauser, Metzger Absent: Pooley

Staff: Putnam Ex-officio, Carl Koch, City Attorney

Approval of Agenda: Motion by Buechler, seconded by Clark to approve the agenda as published. All members present voting aye, motion carried.

Approval of Minutes: Motion by Buechler, seconded by Metzger to approve the minutes of the January 19, 2016 meeting. All members present voting aye, motion carried.

Action: Terry Sabers presented the construction project for the business located at 217 N Main Street, Mitchell, SD. His family acquired this property about a year ago and have done extensive renovation since the purchase. It is currently used for retail. The property has received Deadwood Grant funding for its renovation. Mr. Sabers is currently seeking additional Deadwood funding for a new roof. He is requesting a letter of support to be included in his new application. Motion by Swenson, seconded by Clark to support the Sabers application and send a letter of support on behalf of the MHPC. All members present voting aye, motion carried.

Action: Demolition of the rectory structure located at 321 E. 3rd Avenue that is located within the Holy Family property (block), which is located within a designated historic district. A case report along with various documents were submitted to the commission for their consideration. The case report has been sent to the State Historic Preservation Office for their review. On January 28, 2016 SHPO has requested comments from the local preservation commission, which are to be included in the case report. Putnam and Koch provided the commission a description of the process and requirements of state law and rules.

Dean Uhre and Terry Sabers representing Holy Family provided a brief history of the rectory and a description of the building's physical features. They also provided a summary of the parish's plan to provide their clergy a residence across the street to the east. They said the building was built in 1923 and for the past two years it has not been occupied. Uhre and Sabers shared with the commission how the decision of the church's leadership in examining the long range future and viability of the rectory building. The building is not connected to the church. They provided the commission a description of the physical challenges the building is currently facing which include; water seepage, black mold (air quality), the brick veneer loosening from the exterior walls, handicapped accessibility (ADA), and necessary repairs that are required to make the property habitual and compliant with codes. The case report included quotes from reputable and competent professionals that provided estimation of renovation costs in addressing the current challenges of the rectory.

The parish has explored the possibility of moving the structure to another site. A letter from a mover was included in the case report and it was determined this is not practical.

Uhre and Sabers also shared with the commission the church's examination of renovating the rectory into another use. The existing design and layout would require substantial renovation and costs. Moreover, the diocese also restricts the use of church property for non-religious uses, therefore there is a limitation of potential occupants.

Logan inquired about the architecture of the structure and questioned if the design is consistent or compatible with similar South Dakota buildings constructed during the 1920-1930s'. Simply, does it fit in the area.

Uhre and Sabers indicated the parish has been notified on numerous occasions of the possibility of demolishing the rectory and they were notified in December of 2015 that a demolition permit was to be pursued soon.

The church has not made a final determination of what the site of the rectory will be used for once the rectory is removed. However, they want to insure that it enhances the historic appearance of the iconic church. Possible uses include enhanced green space, grotto or other attractive landscaping features. The church feels that removing the rectory building will provide a better view of the historic church building.

The church would like to use the resources that are currently being used for the rectory and invest them into the historic preservation of the church.

Findings:

1. The commission has determined the case report submitted by church has shown that all feasible alternatives and possible other uses have been examined.
2. The church has examined the possible of moving the building
3. The current design, floor layout, and physical challenges of the building contribute to the substantial cost of remediation, renovation, and code compliance.
4. The commission noted the restriction of the owner to potential occupants and marketability.
5. The commission has determined the parish members and their extended community have been informed of the potential demolition through an extensive series of meetings, handouts and repeated messages in the church bulletin and the commission has conducted a public hearing. The church has not heard of any opposition from their membership.

Motion by Swenson, seconded by Hauser to conclude based of the case report and testimony from representatives of Holy Family Church that the request for a demolition permit be granted. Members Logan, Buechler, Swenson, Hauser, Metzer vote aye, Clark abstained. Motion carried.

Action: VFW 215 N Main St. Putnam inform the commission of the VFW's plan to renovate the building's second floor into meeting rooms and they plan on installed another outside exit. They are also looking at an elevator and other improvements to bring the building compliant to various codes. The planning commission has approved the plan. The building is historic and the owners may seek historic funding at a future date. The commission encourages the building owners to

insure the renovations and improvements be compatible with historic standards. Motion by Clark, seconded by Clark to approve the plan. All members present voting aye, motion carried.

Discussion of future members: The commission identified a few names of potential HPC members. Logan will visit with the mayor about future appointments. Putnam reminded the commission that members must live in the city or have a business in the city.

Projects: The commission discussed the possibility of updating walking tours publications that would for public distribution. The commission may seek funding and collaboration with other organizations. The commission also is exploring acquiring signs that may recognize properties that have received historic or main street funding. No formal action taken.

Next Meeting: The commission will try to meet again in March.

Chairman Logan adjourned the meeting at 1:30.

_____ _____

Chairman Secretary

mms Mitchell Main Street & beyond

APPLICATION FOR MITCHELL MAIN STREET REVOLVING LOAN FUND

The intent of Mitchell Main Street's Revolving Loan Fund is to rehabilitate the exteriors of deteriorating properties in the downtown area. Interested property owners may apply for a five year, low interest loan, which can be used for the rehabilitation of building exteriors. The ultimate goal of these loan funds is to encourage building improvements, which adds to the aesthetic appeal of Mitchell's downtown area and encourages economic growth.

The property must be located in designated areas of downtown Mitchell (see map on following page) and the applicant must provide architectural renderings of the proposed design. Renovations to a historic property must maintain its historic character and must also conform to guidelines established in the "Secretary of the Interior's Standards for Rehabilitation and Guidelines for Rehabilitating Historic Buildings". This information is available from Mitchell Main Street and Beyond or at http://www.nps.gov/hps/tps/tax/rhb/stand.htm.

Eligible Properties

Owners and renters of existing buildings within the historic commercial district are eligible for loans (see map of designated historic area). The loan funds are limited and will be available to eligible applicants on a first come, first serve basis until the funds have been loaned out.

Loan Award Disbursement

The maximum loan amount for an eligible applicant will be determined by the amount of lineal feet of the building frontage times four hundred ($400) per running front foot. Some examples are noted below.

Store Frontage	Maximum Loan
50 Feet	$20,000
75 Feet	$30,000
100 Feet	$40,000

Applicants that have buildings on corner lots may apply for additional loan funds for improvements to the visible street side of the building.

Terms of Loan

The interest rate to be levied on any loan will not exceed three (3) percent simple interest per annum.

The maximum term of a loan will not exceed 5 years. It is expected that the term for most loans will be five years or less in duration.

A loan must be paid off before a new one can be distributed for the same property. Only one loan will be allowed for a property at any given time.

Missing scheduled payments will create a default on entire loan balance and the loan will be turned over for collection.

Loans must be used and building improvements completed within the calendar year in which the loan was approved. Applicants may apply for an extension of 1 calendar year if they are in need of another construction season.

Uses of the Loan Funds

Loans will be made for the preservation, improvement, restoration, and rehabilitation of historic properties and non-historic properties as described in the following definitions:

> **"Preservation"** means the act or process of applying measures to sustain the existing form, integrity, and material of a property.
>
> **"Improvement"** means the act of upgrading the basic physical condition of a property in a manner consistent with the *Standards for Rehabilitation* adopted by the Secretary of the United States Department of the Interior now in effect and as may subsequently be modified, changed, or amended. This type of activity includes upgrading mechanical systems, providing appropriate barrier-free access for handicapped persons, and bring a property into conformance with building codes.
>
> **"Restoration"** is defined as the act or process of accurately depicting the form, features, and character of a property as it appeared at a particular period of time by means of the removal of features from other periods in its history and reconstruction of missing features from the restoration period.
>
> **"Rehabilitation"** is defined as the act or process of making possible an efficient compatible use for a property through repair, alterations, and additions while preserving those portions of features which convey its historical, cultural act or architectural values.

Properties deemed historic and listed as contributing to the Mitchell Historic Commercial District should follow the "Secretary of the Interior's Standards for Rehabilitation and Guidelines for Rehabilitating Historic Structures".

Properties listed as non-contributing to the historic district have the option to follow the "Secretary of the Interior's Standards for Rehabilitation and Guidelines for Rehabilitating Historic Structures" if the property is at least 50 years old or the property owner is interested in maintaining the historic character of the building. Otherwise, non-contributing properties must comply with downtown design guidelines that provide ways to create continuity among downtown buildings. A design plan must be approved for these buildings in the same manner that it would be for a contributing structure.

Applicants should approach the Mitchell Historic Preservation Commission, South Dakota State Historic Preservation Office, or Mitchell Main Street and Beyond to determine if their property is contributing or non-contributing to the historic district. Applicants will need to comply with design guidelines approved by the Mitchell Historic Preservation Commission for the central business district area, meet city building codes and permit requirements and meet basic lending criteria established by the participating financial institutions.

mms Mitchell Main Street & beyond

Eligible Improvements

1. Repair and renovation of building exterior facades;
2. Design or architectural fees and expenses;
3. Construction interest expense;
4. Masonry repair;
5. Cleaning of building exterior;
6. Exterior painting;
7. Repairing or replacing cornices, entrances, doors, windows, decorative details, awnings and appropriate exterior lighting;
8. Sign removal, repair or replacement in compliance with city sign ordinance;
9. Upper floor window rehabilitation;
10. Roof repair or replacement;
11. Life safety;
12. Exterior wall and roof structural work.

Priority will be placed on the exterior condition of the property prior to improvements to:

1. Structural integrity;
2. Life safety, including sprinkler systems and updated electrical systems;

Applications may be made for aid to infill work in the historic commercial district. Infill must blend with current architecture and must follow design guidelines. Separate considerations will apply.

All repairs must match the existing materials or be of a higher quality. All roof work must meet current building codes. Metal roofs will not be allowed. Other repairs may be approved if they improve the aesthetic quality of the building.

Criteria

The following criteria will be used to make loan award decisions:

- Significance of the resource;
- Physical condition of the property;
- Plans for the preservation of the structure;
- Plans for the future of the property;
- Loans must have a personal guarantee;

Application Process

Applications are available from Mitchell Main Street and Beyond and are accepted year-round. Applicants are urged to consult with Main Street Staff before and during the loan approval process.

1. Loan applicant must be credit worthy as determined by one of the participating banks listed below. A loan application must be submitted to a banker in order to receive further loan consideration.

   CorTrust Bank, 996-7775
   First National Bank South Dakota, 996-7755

First Dakota National Bank, 996-3364
Fulton State Bank, 996-1000
Home Federal Bank, 996-8100
BankWest, 995-5059

2. A copy of the loan application from the bank must be submitted with the design portion of the application.

3. Photos of the current façade must be attached to the application.

4. A detailed design and renovation plan prepared by a contractor or architect must be submitted with the application.

5. The quote being used for the project must be submitted with the application.

Approval Process

1. Applications are forwarded to the City of Mitchell Planning and Zoning Office for code and permit review.

   Applications are reviewed by the revolving loan fund committee.

2. Final decisions are made by the Historic Preservation Commission (HPC) upon the recommendation of the committee review of applications and action on requests normally takes a minimum of a month. The HPC reviews projects with the intent of preventing adverse impact to historic properties and the status of the historic district. The HPC must approve the project before any construction begins.

mms & beyond
Mitchell Main Street

Properties Eligible for Revolving Loan Fund Must Be Located Within the Boundaries on the Map Below

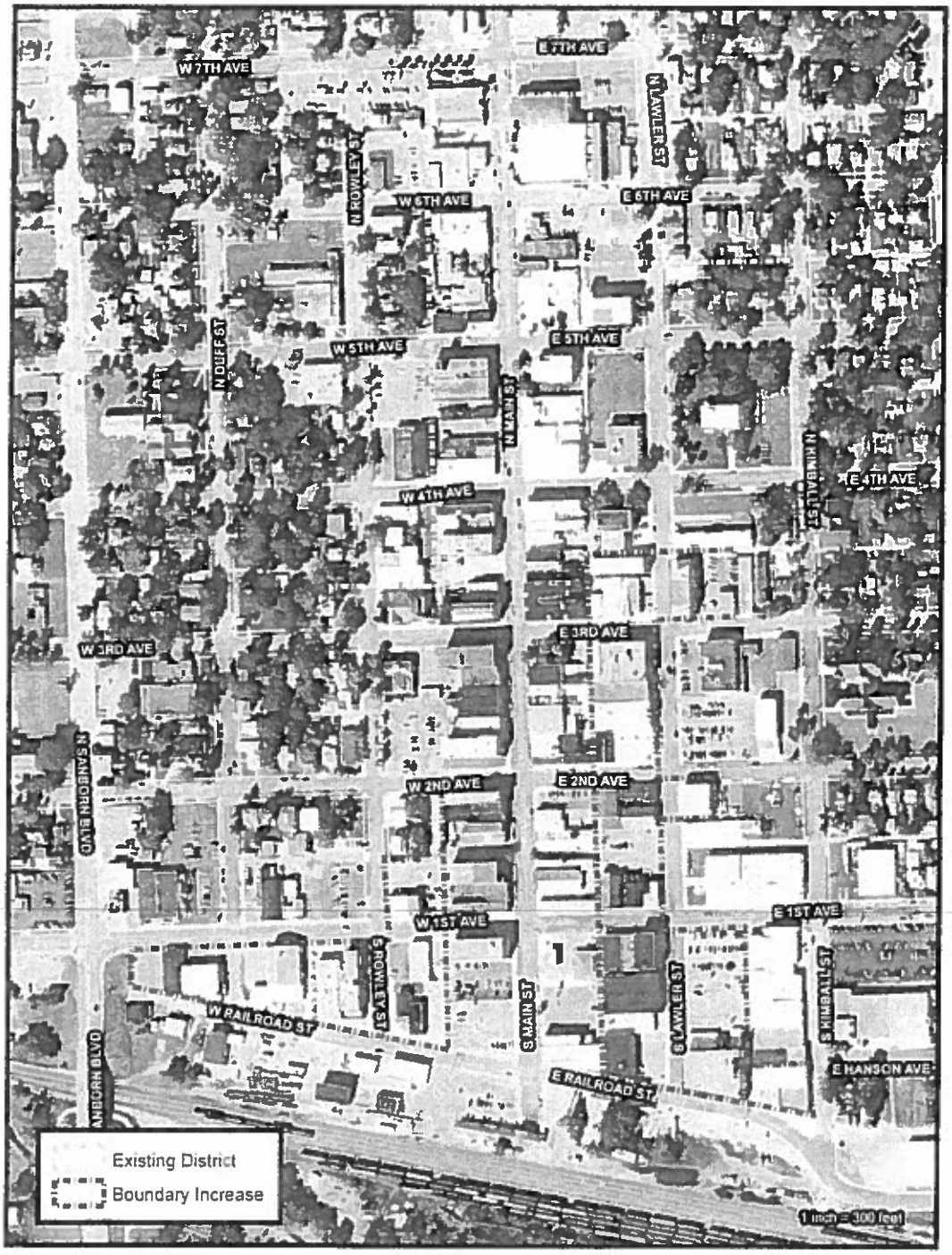

mms & beyond
Mitchell Main Street

PRIMARY CONTACT INFORMATION FOR THIS APPLICATION			
Name	Hard Drive Outlet of Mitchell, Inc.		
Address	318 N. Main St. Mitchell SD 57301		
Phone	605-996-4899	Fax	605-996-5825
E-mail	markv@officeadv.com		
Property Address	318 N. Main St. Mitchell SD 57301		
Applicant Name	Hard Drive Outlet of Mitchell, Inc. (name of person/entity to receive loan)		
Architect/Firm	(all applicants must use an architect for project design)		
Property Owner	Mark VanDenHoek		
Mailing Address	318 N. Main St Mitchell SD 57301		

Contributing ☐		Non-Contributing ☐	
Description of Property			
☒ Current Commercial Tenants			
Business Name	Business Owner	Address	Current sq. ft. Occupied
Hard Drive Central	Mark VanDenHoek	318 N. Main St.	2600
The Office Advantage	Mark VanDenHoek	↓	800
Secure Data	Mark VanDenHoek	↓	400
☐ Current Residential Tenants		# occupied	# vacant
Tenant Name	Unit #	Mailing Address	

mms & beyond
Mitchell Main Street

Building History (if available)

Purpose of Project (check all applicable)

- ☐ Preservation
- ☒ Improvement
- ☐ Restoration
- ☐ Rehabilitation

Total Cost of façade renovation $ 16,000

Is the exterior renovation part of a larger project?

☒ Yes ☐ No, the exterior rehab is the only work I am doing

If yes, please describe comprehensive project.

The entire building will be reroofed and rear walls reclad.

mms Mitchell Main Street & beyond

Summary of Existing Condition of Exterior (please attach pictures – Attachment 1).

Front - Plain No awings or coloring, full front window

Summary of Proposed Scope of Work (materials, color schemes, etc.) Please attach colorized drawings that include pre- and post-rehab detail, indicating specifically what will be modified and how (Attachment 2).

Attached

mms & beyond
Mitchell Main Street

How will the proposed project affect the historic character of the property?
It should have no affect.
How will your project complement downtown redevelopment efforts?
Enhance look of building.
Why is this project necessary and what are the desired results?
More square footage inside, update 60 year old windows that are not energy efficient and widen door
Would the completed project enhance the aesthetic appeal and quality of life of downtown Mitchell?
Yes

mms Mitchell Main Street & beyond

Would the completed project enhance the tenant mix and contribute to the economic draw and viability of downtown Mitchell?
Yes
Does the project substantially improve an unsightly or detracting building in downtown Mitchell?
Yes
Will this project add or maintain employment or housing in the downtown area?
Yes

mms & beyond
Mitchell Main Street

Is the project a structural improvement, health and safety issue, or a remodel?
structual improvement.

For Office Use Only

Date Received at MMSB Office	
Date Sent to City Planning Office	
Date Reviewed by HPC	
Approved/Denied	

mms Mitchell Main Street & beyond

By applying for funds, the applicant agrees to the use of his/her likeness and property in publicity and further Mitchell Main Street & Beyond campaigns.

By undertaking a project using the Mitchell Main Street Revolving Loan Fund, the opportunity for the use of alternate funding sources may be affected depending upon the improvements made and whether the property is contributing to the historic commercial district. Any changes may affect the contributing/non-contributing status of a property. Please consult with the South Dakota State Historic Preservation Office if you are concerned about the matter.

Applicant Assurance

Acting as a duly authorized officer of the applying business, I submit this request for a revolving loan from Mitchell Main Street and Beyond.

Mark Van Den Hoek
Signature of Applicant

MARK VAN DEN HOEK
Name (Printed)

11/21/16
Date

Owner Assurance

As a duly authorized representative of the property owner, I acknowledge and endorse this request.

Mark Van Den Hoek
Signature of Property Owner

MARK A VAN DEN HOEK
Name (Printed)

11-21-16
Date

mms & beyond
Mitchell Main Street

ATTACHMENT 1: PHOTOS

(current and historic, if available)

The Office Advantage

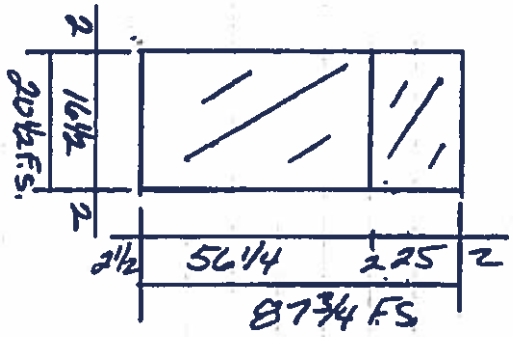

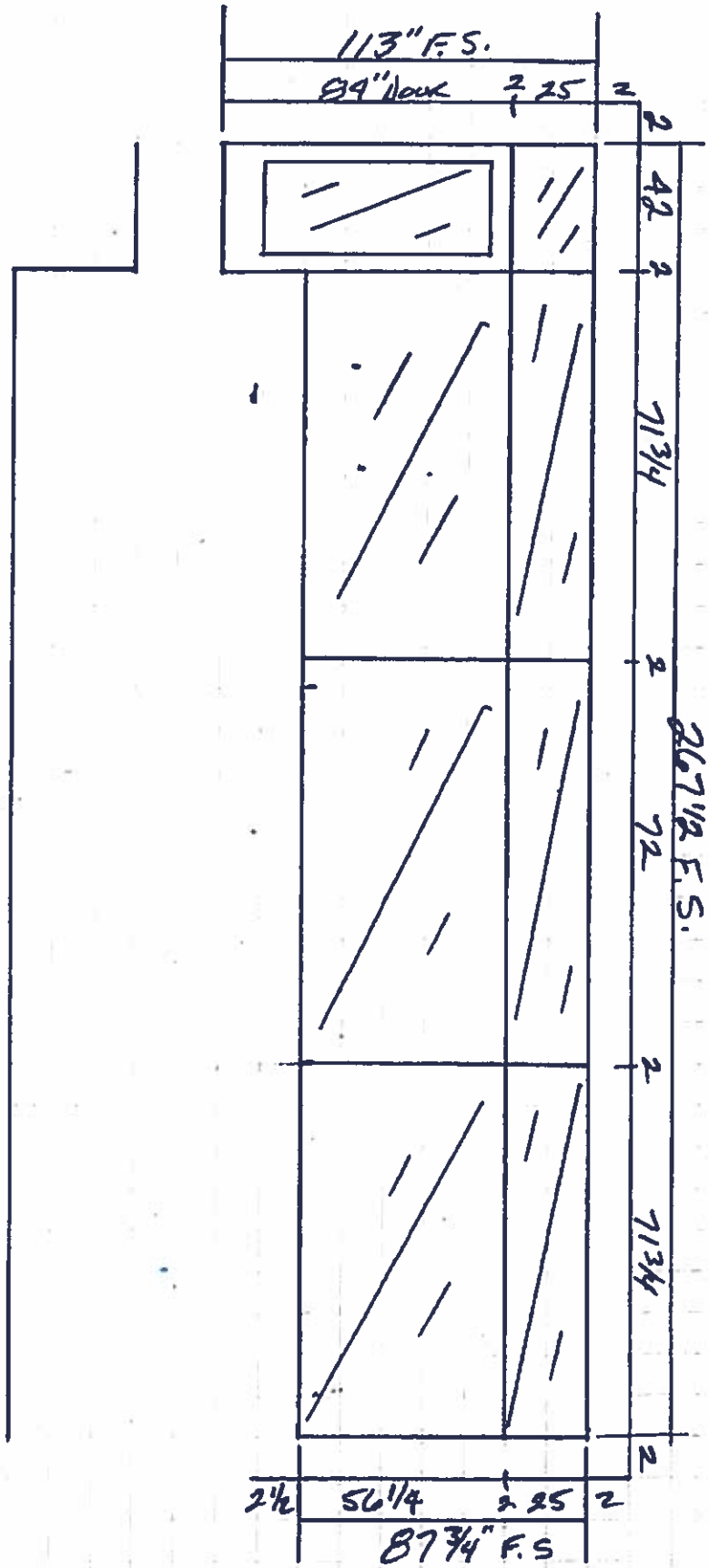

MANKO
WINDOW SYSTEMS INC.

PHONE 515/288-7427 800/532-1160 FAX: 515/288-6968
700 NEW YORK AVENUE, DES MOINES, IA 50313
PHONE 402/331-6989 800/345-4248 FAX: 402/334-5554
13333 LYNAM DRIVE, OMAHA, NE 68138

mms & beyond
Mitchell Main Street

ATTACHMENT 2: DRAWINGS PRE & POST

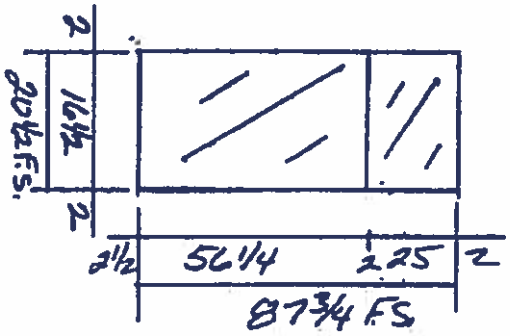

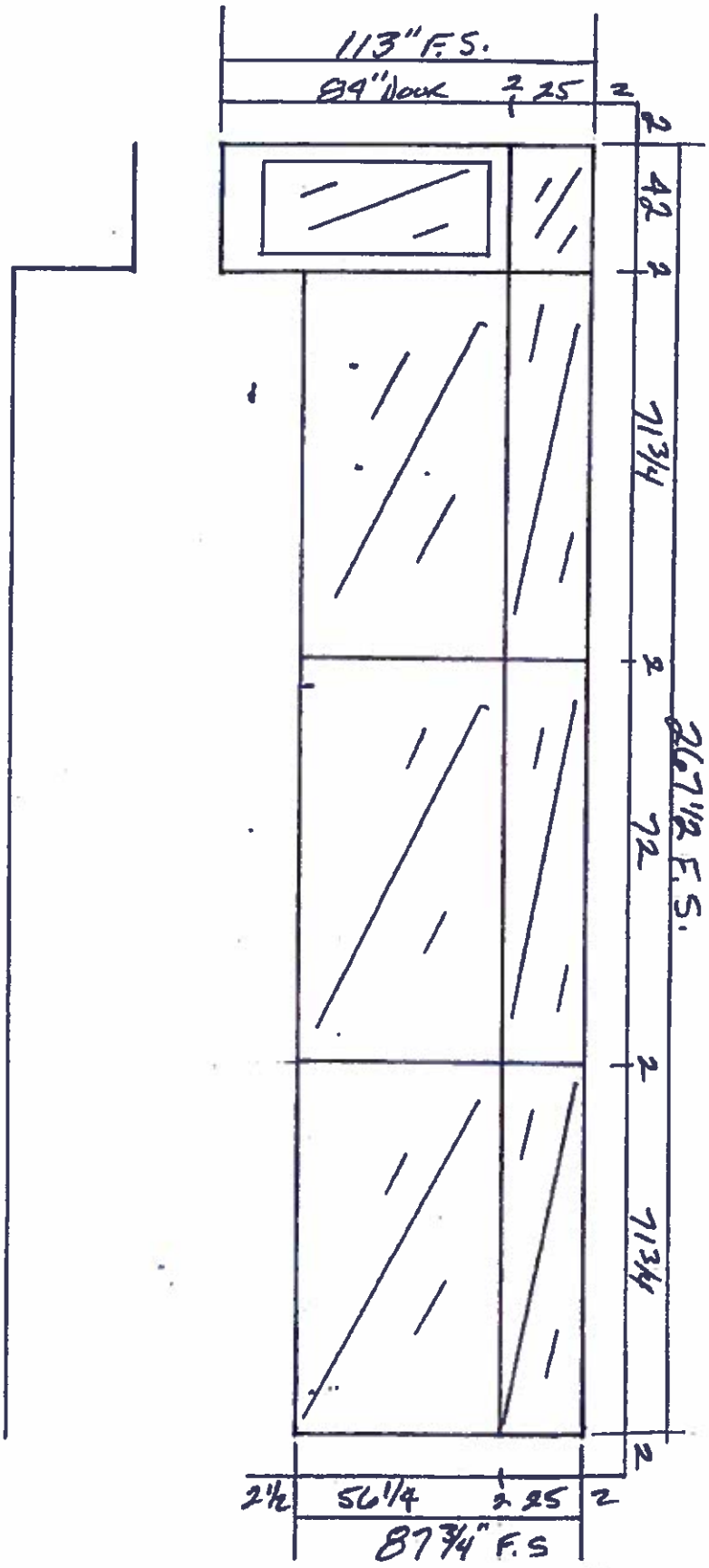

MANKO
WINDOW SYSTEMS INC.

PHONE 515/288-7427 800/532-1160 FAX 515/288-6968
700 NEW YORK AVENUE, DES MOINES, IA 50313
PHONE 402/331-6989 800/345-4248 FAX 402/334-5554
13333 LYNAM DRIVE, OMAHA, NE 68138

26'
Hard Drive
COMPUTER
• Sales
• Repair
• Networking
Office Advantage
printCUBE

8' 6"
Hard Drive
Computer
• Repair
• Service
• Support
22'
Len's Awning & Canvas
Sioux Falls, SD

SDCL 1-19A-11.1 - PROJECT NOTIFICATION FORM

State/Local Government Entity Requesting Review

- ☐ City of Mitchell, SD _____
- ☐ County of _____
- ☐ State Agency: _____

Contact Person at Above-Listed Government Entity

Name: Neil Putnam
Address: 612 N Main St, Mitchell, SD 57301
Phone Number: 605 995-8433
Email: nputnam@cityofmitchell.org

Project Location: 512 N. Main St, Mitchell, SD

_____

This property is:

- ☐ Listed individually in the State/National Register of Historic Places
- ☐ Located in a listed historic district: _Mitchell Historic Downtown

_____

Project Description:
See attached letter

Please include **photographs** of the property, including at least an overall photograph of the main façade and other features that may be impacted.

Government Official's Signature: _____

Date: 11-10-16

Mail this form and photographs to:

ATTN: Review and Compliance
State Historic Preservation Office
900 Governors Dr.
Pierre SD 57501

The City of Mitchell, as part of its project notification to the South Dakota State Historic Preservation Office, is providing the following project description. The City is taking steps towards demolishing a building located at 512 N. Main Street, Mitchell, South Dakota which was acquired by the City in August 2013 from a private party. The building is listed as a contributing building within the Mitchell Downtown Historic District. Photographs and other documents are enclosed, which provide a visual depiction of the building in the past and its current condition.

The building is bordered by a city owned parking lot to the south and a building used by Northwestern Energy to the north. The building is a block south of the World's Only Corn Palace. The Retired Senior Volunteer Program (RSVP), which is managed by the city, operated a thrift store in the building from February 2014 to August 2015. The building has not been occupied since that time. The RSVP personnel identified a number of issues during their occupancy including the electrical system not being up to code, boiler problems, leaky plumbing, significant pest infestation (mice and bats), windows needing replacement/maintenance, and serious structural degradation of the rear deck and steps. During RSVP's occupancy, the City made significant expenditures towards the building to meet the needs of the staff and customers.

Recently, several City employees (Planner, Building Inspector, Code Enforcement Officer, City Attorney, and Fire Marshal) inspected the building and identified numerous, serious code and safety issues (see recent photos). Evidence suggests that the building has been the victim of criminal trespass since the building was vacated which appears to have resulted in additional damage. The following are several conditions observed during the cursory inspection which violate code.

1. Broken and leaking windows (subsequently boarded)
2. Back steps and deck rotted and poor condition. (subsequently removed)
3. Exposed electrical outlets and wiring
4. Floors and coverings in need of replacement or significant repair
5. Water stains on ceiling indicating roof leaks
6. Probable mold infestation
7. Asbestos remediation
8. Damage to sheetrock and drop ceiling materials
9. Non-compliant with ADA requirements
10. Water damage in basement
11. Due to an open roof, unstable floor and interior stairs that are unsound, the building was placarded for no entry by fire department members by Fire Marshall. (Section 311.5 Placards). This means, in the event of a fire at the building, the fire department may not attempt to save the building, but attempts to prevent damage to surrounding properties.

Adding further scrutiny to these conditions are the comprehensive renovation efforts taking place throughout downtown Mitchell. For example, Mitchell Main Street and Beyond commissioned a downtown streetscape plan (see www.mitchellmainstreet.com/streetscape) and that project is being actively pursued by the community. Additionally, the City is developing and constructing 6th Avenue Plaza (see www.cityofmitchell.org/429/6th-Avenue-Plaza). The removal of this unsightly building, which has exceeded its useful life and surpassed the point where rehabilitation would be feasible, will positively accentuate the impact of these community projects. Moreover, the resulting space will be more viable to serving the needs of the community; such as additional parking to the district to accommodate additional visitation and economic activity or possible expansion of the 6th Avenue Plaza.

In conjunction with the above efforts, the City is currently reviewing and updating its nuisance, property maintenance, and appearance standards relating to property within the City. At public hearings for these updates, many identified downtown as an area that needs significant, immediate attention due to blatant code violations that detract from the appearance, ambiance, and historic character of the downtown area. The City is hopeful that through partnerships, incentives, encouragement, and enforcement that downtown businesses will choose to invest in the appearance and restoration of their properties. It is the City's hope that the commercial, entertainment, visitor, and residential opportunities from the existing historic buildings in the downtown area will be enhanced and expanded upon. However, the City will face just criticism if it attempts to prompt further downtown revitalization without first addressing its own distressed property. In addition, it is likely that City resources and taxpayer dollars could be saved by eliminating expenses from an unusable building.

The City recognizes that demolishing a historic building should be a decision of last resort and that feasible alternatives must be examined prior to a final determination of a building that has lost its utility and character. The City does not dispute that the demolition of this building will obviously have an adverse effect on this particular building. However, it is the City's opinion that the demolition of this building will increase the overall historical aesthetics of the downtown area by removing this distracting and unsightly hazard from the district. Stated alternatively, the building in its current state has an adverse effect on the totality, integrity, and viability of the whole Mitchell Historic Downtown District, especially the historic and iconic World's Only Corn Palace. As is required, the City has concluded based on all relevant factors that, other than demolition, there are no feasible and prudent alternatives which make the building suitable for occupancy or for market. As demolition is the only alternative, there is no way to minimize harm to this building itself but care will be taken not to affect adjacent properties.

Therefore, the City respectfully requests that SDSHPO considers this notification and description. It is the City's hope that SDSHPO finds these materials sufficient for its purposes and promptly issues its findings allowing the City to proceed with the project without need for a formal case report or other additional action. If your office desires additional information or would like to personally inspect the building, please do not hesitate to contact us. Thank you for your prompt consideration.

south dakota
STATE HISTORICAL SOCIETY
DEPARTMENT OF EDUCATION

November 21, 2016

rec'd 11-23-16

Neil Putnam
City of Mitchell
612 N Main St
Mitchell SD 57301

RE: SDCL 1-19A-11.1 Consultation
Project: 161114001S – Demolition of city-owned building at 512 N Main St, Mitchell
Location: Davison County
(COM)

Dear Mr. Putnam:

Thank you for the opportunity to comment on the above referenced project pursuant to South Dakota Codified Law (SDCL) 1-19A-11.1. The South Dakota Office of the State Historic Preservation Officer (SHPO) would like to provide the following comments concerning effect of the proposed undertaking on the non-renewable cultural resources of South Dakota.

On November 14, 2016, we received notification of the above-referenced project to demolish the building at 512 N Main St. This building is a contributing resource in the Mitchell Historic Commercial District, which is listed on the National Register of Historic Places. SDCL 1-19A-11.1 outlines a specific process that must be followed prior to any governmental action that may harm any historic property that is included on the National or State Registers of Historic Places.

Based on the information provided, the proposed project has the potential to encroach upon, damage or destroy historic property that is included in the National Register of Historic Places or the State Register of Historic Places. Therefore, in accordance with ARSD 24:52:07:03, the SHPO is requesting an abbreviated case report consisting of items 1, 5, 7, and 10.

- For item #7, please include information on the alternatives to demolition that have been considered and why the city does not consider those alternatives to be feasible and prudent.

- Consistent with item #10, please have the Mitchell Historic Preservation Commission review and comment on the case report at their next meeting before submitting the case report to SHPO for final review.

If you have any questions or concerns, please contact Kate Nelson at Kate.Nelson@state.sd.us or at (605) 773-6005. Your concern for the non-renewable cultural heritage of South Dakota is appreciated.

Sincerely,

Jay D. Vogt
State Historic Preservation Officer

Kate Nelson

Kate Nelson
Restoration Specialist

Mitchell Department of Public Safety
201 West First | Mitchell, SD 57301
Police Division | EMS Division | Regional 911
Phone: 605-995-8400 | Fax: 605-995-8486

Fire Division | Phone: 605-995-8445 | Fax: 605-995-8486
Traffic Division | Phone: 605-995-8408 | Fax: 605-995-8408
Animal Control | Cell: 605-770-0476 | Fax: 605-995-8486

CityOfMitchell.org

Mitchell
SOUTH DAKOTA
Outside expectations

On November 4th, 2016, myself and others did an inspection of the building located at 512 N. Main Street in Mitchell, SD.
The building is a multiple floor occupancy with a full basement. At the time of the inspection the building is vacated and appears to be in a lot of disrepair.
Here is the list of fire code issues that I found during the inspection:
These violations are based on the 2012 International Fire Code (IFC).

1. **Section 311.2.1 Security.** – All doors need to be locked. Back windows and door need to be boarded up and back stairwell removed.
2. All utilities need to be shutoff and meters removed.
3. Due to an open roof, unstable floor and interior stairs that are unsound, the building will be placarded for no entry by fire department members. **(Section 311.5 Placards)**

As noted above, these violations are based on the 2012 IFC. This building is a safety hazard to both first responders and the general public.

Respectfully submitted,

Marius Laursen
Fire Marshal
City of Mitchell

City of Mitchell | **Public Works**
612 North Main Street | Mitchell, SD 57301
Phone: 605-995-8433 | Fax: 605-995-8410
CityOfMitchell.org

Mitchell
Outside expectations

Date: November 4th, 2016

On November 4th, 2016 I inspected the exterior of the property at 512 N. Main in Mitchell, SD. Upon inspection I witnessed a building that has been run down and now is becoming an eyesore to the public.

This is what was found during the walk around at 512 N. Main Street

1) Building material starting to crack and fall apart. Unsightly property (5-3-3-1)(B)(3)
2) Building needs attention to the south wall as far as cosmetic is involved. Unsightly Property (5-3-3-1)(B)(3)
3) Tin siding on the back SE corner is not prohibited (Building Inspector discretion)
4) Broken windows Unsightly Property (5-3-3-1)(B)(3)
5) Overgrown Vegetation (5-3-3-6)

These conditions that were found violate the City of Mitchell Ordinances. The Unsightly Ordinance deals with dilapidated or unfinished structures that are not currently under construction. The overgrown vegetation is also a violation of the City of Mitchell Ordinances. No owner shall allow or permit grass, weeds or vegetation to grow into a state that would harbor insects, vermin or pests, or otherwise be a hazard to public health.

Mitchell

Wade London | Public Works Dept.
City of Mitchell | City Hall
612 North Main Street, Mitchell. SD 57301
605-995-8433 Cell: 605-770-7913
wlondon@cityofmitchell.org